Work Order ID 73139

Friday, August 26, 2011 6:49:25 AM

Item ID: D3340-17 **Accept** **Setup** **Start**

Revision ID: **Stop**

Item Name: Aft Skidtube Protector

Start Date: 8/26/2011 **Start Qty:** 4.00 **Cust Item ID:**

Required Date: 9/9/2011 **Req'd Qty:** 4.00 **Customer:**

Reference:

Approvals: **Process Plan:** MF **Date:** 11-08-29 **Tooling:** _____ **Date:** _____ **Run** **Start**

QC: _____ **Date:** _____ **SPC (Y/N):** _____ **Date:** _____ **Stop**

Sequence ID/ Work Center ID	Operation Description	Set Up/ Run Hours	Tool ID	Tool #	Plan Code	Accept Qty	Reject Qty	Reject Number	Insp. Stamp
Draw Nbr	**Revision Nbr**								
D3340	Rev B								
100		0.00							
	PURCHASING								
Waterjet							AB11-8-31		
	Memo	0.00							
FLOW CNC Waterjet 1010.040	1-Cut as per Dwg Dwg Rev: B Prog Rev: B 2-Deburr if necessary								
110	QC2- Inspect parts off machine FAI/FAIB	0.00							
QC							AB11-8-31		
	Memo	0.00							
Quality Control									

Dart Aerospace Ltd

W/O:		WORK ORDER CHANGES					
DATE	STEP	PROCEDURE CHANGE	By	Date	Qty	Approval Chief Eng / Prod Mgr	Approval QC Inspector

Part No: _____ **PAR #:** _____ **Fault Category:** _____ **NCR:** Yes No **DQA:** _____ **Date:** _____

Resolution: _____ **Disposition:** _____ **QA: N/C Closed:** _____ **Date:** _____

NCR:		WORK ORDER NON-CONFORMANCE (NCR)						
DATE	STEP	Description of NC Section A	Corrective Action Section B			Verification Section C	Approval Chief Eng	Approval QC Inspector
			Initial Chief Eng	Action Description Chief Eng	Sign & Date			

NOTE: Date & initial all entries

H:\fFORMS\Quality Assurance\approved QA\NCRWO RevE

Work Order ID 73139

Friday, August 26, 2011 6:49:25 AM

Item ID: D3340-17 **Accept** **Setup Start** **Stop**

Revision ID:

Item Name: Aft Skidtube Protector

Start Date: 8/26/2011 **Start Qty:** 4.00 **Cust Item ID:**

Required Date: 9/9/2011 **Req'd Qty:** 4.00 **Customer:**

Reference:

Run Start **Stop**

Approvals: **Process Plan:** _____ **Date:** _____ **Tooling:** _____ **Date:** _____

QC: _____ **Date:** _____ **SPC (Y/N):** _____ **Date:** _____

Sequence ID/ Work Center ID	Operation Description	Set Up/ Run Hours	Tool ID	Tool #	Plan Code	Accept Qty	Reject Qty	Reject Number	Insp. Stamp
120 QC Quality Control	QC8- Inspect parts - second check **Memo**	0.00 0.00				40			
130 Brake NC Brake NC	Form as per dwg NC BRAKE **Memo**	0.00 0.00				10			
140 QC Quality Control	QC5- Inspect part completeness to step on W/O **Memo**	0.00 0.00				40			

Dart Aerospace Ltd

W/O:		WORK ORDER CHANGES					
DATE	STEP	PROCEDURE CHANGE	By	Date	Qty	Approval Chief Eng / Prod Mgr	Approval QC Inspector

Part No: _____ **PAR #:** _____ **Fault Category:** _____ **NCR:** Yes No **DQA:** _____ **Date:** _____

Resolution: _____ **Disposition:** _____ **QA: N/C Closed:** _____ **Date:** _____

NCR:		WORK ORDER NON-CONFORMANCE (NCR)						
DATE	STEP	Description of NC Section A	Corrective Action Section B			Verification Section C	Approval Chief Eng	Approval QC Inspector
			Initial Chief Eng	Action Description Chief Eng	Sign & Date			

NOTE: Date & initial all entries

H:\fFORMS\Quality Assurance\approved QA\NCRWO RevE

Work Order ID 73139

Friday, August 26, 2011 6:49:25 AM

Item ID: D3340-17 **Accept** **Setup Start** **Stop**

Revision ID:

Item Name: Aft Skidtube Protector

Start Date: 8/26/2011 **Start Qty:** 4.00 **Cust Item ID:**

Required Date: 9/9/2011 **Req'd Qty:** 4.00 **Customer:**

Reference:

Run Start **Stop**

Approvals: **Process Plan:** _____ **Date:** _____ **Tooling:** _____ **Date:** _____

QC: _____ **Date:** _____ **SPC (Y/N):** _____ **Date:** _____

Sequence ID/ Work Center ID	Operation Description	Set Up/ Run Hours	Tool ID	Tool #	Plan Code	Accept Qty	Reject Qty	Reject Number	Insp. Stamp
150	Grey Sandtex(Ref:4.3.5.6) per QSI005 4.3	0.00							
Powdercoat	Memo	0.00							
Powder Coating	START TIME: 1:45 ☐OVEN TEMPERATURE: 320°F ☐FINISH TIME: 2:15								
160	QC3- Inspect Part Finish	0.00							
QC	Memo	0.00							
Quality Control									
170	Identify as per dwg & Stock Location: ST501	0.00							
Packaging	Memo	0.00							
Packaging									

10X Ø M-L 11/09/07

M 117338

10 G M 11/09/07

SL (10X) 11-09-07

Dart Aerospace Ltd

W/O:		WORK ORDER CHANGES					
DATE	STEP	PROCEDURE CHANGE	By	Date	Qty	Approval Chief Eng / Prod Mgr	Approval QC Inspector

Part No: _____ **PAR #:** _____ **Fault Category:** _____ **NCR:** Yes No **DQA:** _____ **Date:** _____

Resolution: _____ **Disposition:** _____ **QA: N/C Closed:** _____ **Date:** _____

NCR:		WORK ORDER NON-CONFORMANCE (NCR)						
DATE	STEP	Description of NC Section A	Corrective Action Section B			Verification Section C	Approval Chief Eng	Approval QC Inspector
			Initial Chief Eng	Action Description Chief Eng	Sign & Date			

NOTE: Date & initial all entries

H:\fFORMS\Quality Assurance\approved QA\NCRWO RevE

Work Order ID 73139

Friday, August 26, 2011 6:49:25 AM

Item ID: D3340-17 **Accept** **Setup Start**

Revision ID: **Stop**

Item Name: Aft Skidtube Protector

Start Date: 8/26/2011 **Start Qty:** 4.00 **Cust Item ID:**

Required Date: 9/9/2011 **Req'd Qty:** 4.00 **Customer:**

Reference:

Run Start

Approvals: **Process Plan:** _____ **Date:** _____ **Tooling:** _____ **Date:** _____

Stop

QC: _____ **Date:** _____ **SPC (Y/N):** _____ **Date:** _____

Sequence ID/ Work Center ID	Operation Description	Set Up/ Run Hours	Tool ID	Tool #	Plan Code	Accept Qty	Reject Qty	Reject Number	Insp. Stamp
180	QC21- Final Inspection - Work Order Release	0.00						11/9/12	
QC Quality Control	**Memo**	0.00							

MF
11-09-08

Dart Aerospace Ltd

W/O:		WORK ORDER CHANGES					
DATE	STEP	PROCEDURE CHANGE	By	Date	Qty	Approval Chief Eng / Prod Mgr	Approval QC Inspector

Part No: _____ **PAR #:** _____ **Fault Category:** _____ **NCR:** Yes No **DQA:** _____ **Date:** _____

Resolution: _____ **Disposition:** _____ **QA: N/C Closed:** _____ **Date:** _____

NCR:		WORK ORDER NON-CONFORMANCE (NCR)						
DATE	STEP	Description of NC Section A	Corrective Action Section B			Verification Section C	Approval Chief Eng	Approval QC Inspector
			Initial Chief Eng	Action Description Chief Eng	Sign & Date			

NOTE: Date & initial all entries

H:\fFORMS\Quality Assurance\approved QA\NCRWO RevE

Picklist Print

Friday, August 26, 2011 6:49:22 AM

Work Order ID: 73139

Parent Item: D3340-17

Parent Item Name: Aft Skidtube Protector

Start Date: 8/26/2011 **Required Date:** 9/9/2011

Start Qty: 4.00 **Required Qty:** 4.00

Comments: IPP: A 05.11.10 Preliminary issue AP/EC IPP REV:B
11.05.26 now made in house DD verf:EC

Component Item ID/ Item Name	Replacement Item ID	Mfg/ Purch	Bin Item	Primary Location	Last Location	Route Seq ID	Unit of Measure	Qty on Hand	Qty per Kit	Total Qty	Qty Issued	Date Issued	Status
M1010S19GA 1010/1025 SHEET .040		Purchased	No			100	sf	0.0000	0.32	1.347368	3.5 1B1-8-31		

1.09.08 - 28GA 116 791

(10)

Dart Aerospace Ltd

W/O:		WORK ORDER CHANGES					
DATE	STEP	PROCEDURE CHANGE	By	Date	Qty	Approval Chief Eng / Prod Mgr	Approval QC Inspector

Part No: _____ **PAR #:** _____ **Fault Category:** _____ **NCR:** Yes No **DQA:** _____ **Date:** _____

Resolution: _____ **Disposition:** _____ **QA: N/C Closed:** _____ **Date:** _____

NCR:		WORK ORDER NON-CONFORMANCE (NCR)						
DATE	STEP	Description of NC Section A	Corrective Action Section B			Verification Section C	Approval Chief Eng	Approval QC Inspector
			Initial Chief Eng	Action Description Chief Eng	Sign & Date			

NOTE: Date & initial all entries

H:\fFORMS\Quality Assurance\approved QA\NCRWO RevE

DART AEROSPACE LTD	Work Order: 73139
Description: AFT SKID TUBE PROTECTOR	Part Number: D3340-17
Inspection Dwg: D3340-17 . Rev: B	Page 1 of 1

FIRST ARTICLE INSPECTION CHECKLIST

[X] First Article [X] Prototype

Drawing Dimension	Tolerance	Actual Dimension	Accept	Reject	Method of Inspection	Comments
250 X 300	+/- .010	253 X 300	✓		V HB02	
250 X 485	+/- .010	253 X .487	✓		V	
.50	+/- .030	~~253~~ X .499	✓		V	
.63	+/- .030	.623	✓		V	
2.315	+/- .010	2.312	✓		V	
2.815	+/- .010	2.815	✓		V	
1.815	+/- .010	1.819	✓		V	
1.625	+/- .010	1.625	✓		V	
9.580	+/- .010	9.580	✓		T HB01	
13.086	+/- .010	13.080	✓		T	
16.375	+/- .010	16.375	✓		T	
.040	+/- .010	.041	✓		T	

Measured by:	AB	Audited by:		Prototype Approval:	
Date:	11-8-31	Date:	11/09/10	Date:	

Rev	Date	Change	Revised by	Approved
A		New Issue	KJ/JLM	

DESIGN	DRAWN BY	DART AEROSPACE LTD HAWKESBURY, ONTARIO, CANADA	
MB	MB		
CHECKED	APPROVED	DRAWING NO.	REV. B
		D3340	SHEET 7 OF 11
DATE		TITLE	SCALE
05.11.22		SKIDTUBE PROTECTOR	1:10

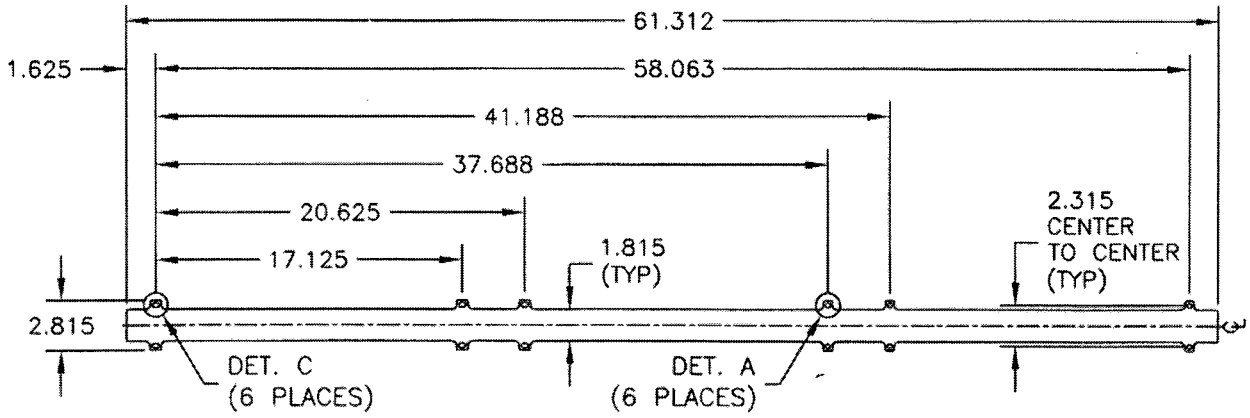

D3340-15F FLAT PATTERN

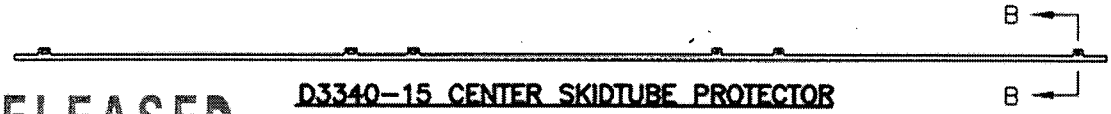

D3340-15 CENTER SKIDTUBE PROTECTOR

RELEASED
05.11.28

#73139

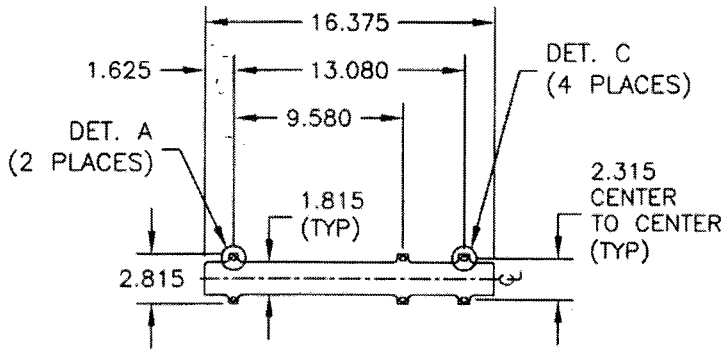

D3340-17F FLAT PATTERN

NOTES:

1) MATERIAL: AISI 1010-1025 OR ASTM A36/A366/A1008 OR CSA G40-21, 38W/44W/50W/60W/70W SERIES COLD ROLLED STEEL 19 GAUGE (0.040 THICK)
2) PART IS SYMETRICAL ABOUT CENTER LINE
3) FINISH: POWDER COAT GREY SANDTEX (REF. 4.3.5.6) PER DART QSI 005 4.3
4) TOLERANCES ARE PER DART QSI 018 UNLESS OTHERWISE NOTED
5) ALL DIMENSIONS ARE IN INCHES
6) BREAK ALL SHARP CORNERS 0.063 MAX

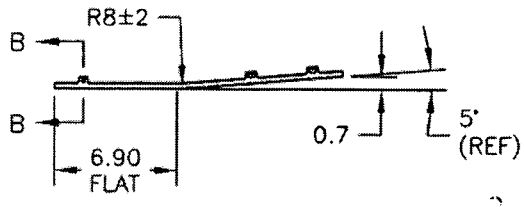

D3340-17 AFT SKIDTUBE PROTECTOR

Dart Aerospace Ltd

W/O:		WORK ORDER CHANGES					
DATE	STEP	PROCEDURE CHANGE	By	Date	Qty	Approval Chief Eng / Prod Mgr	Approval QC Inspector

Part No: _____ **PAR #:** _____ **Fault Category:** _____ **NCR:** Yes No **DQA:** _____ **Date:** _____

Resolution: _____ **Disposition:** _____ **QA: N/C Closed:** _____ **Date:** _____

NCR:		WORK ORDER NON-CONFORMANCE (NCR)						
DATE	STEP	Description of NC Section A	Corrective Action Section B			Verification Section C	Approval Chief Eng	Approval QC Inspector
			Initial Chief Eng	Action Description Chief Eng	Sign & Date			

NOTE: Date & initial all entries

H:\FORMS\Quality Assurance\approved QA\NCRWO RevE

DESIGN	DRAWN BY	DART AEROSPACE LTD HAWKESBURY, ONTARIO, CANADA	
MB	MB		
CHECKED	APPROVED	DRAWING NO.	REV. B
		D3340	SHEET 11 OF 11
DATE		TITLE	SCALE
05.11.22		SKIDTUBE PROTECTOR	1:1

RELEASED 05-11-28

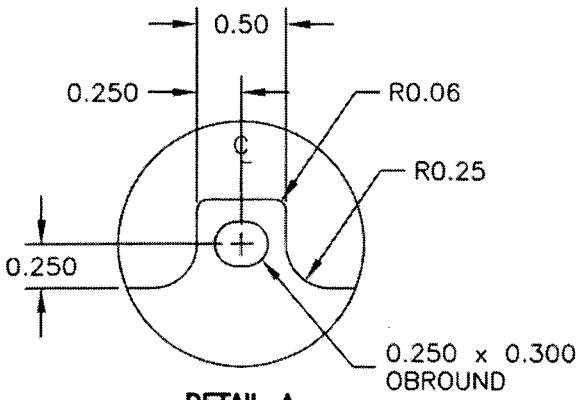

DETAIL A

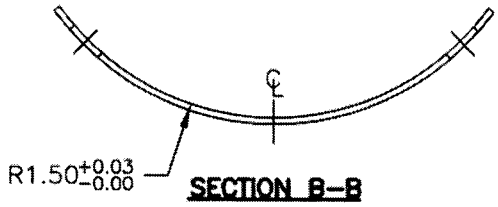

SECTION B–B

73139

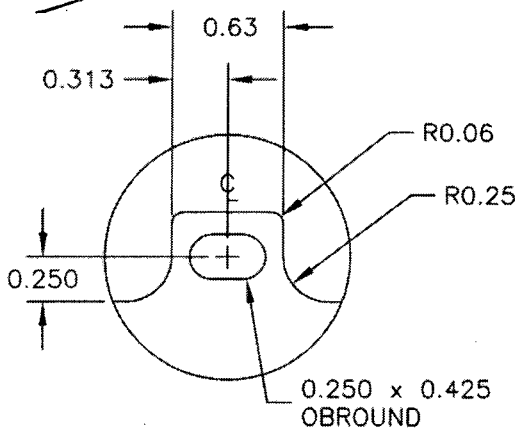

DETAIL C

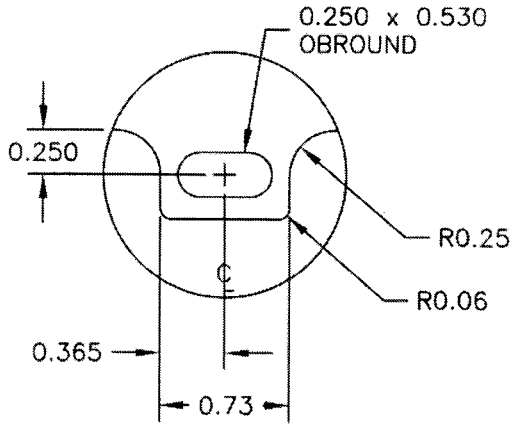

DETAIL D B

Dart Aerospace Ltd

W/O:		WORK ORDER CHANGES					
DATE	STEP	PROCEDURE CHANGE	By	Date	Qty	Approval Chief Eng / Prod Mgr	Approval QC Inspector

Part No: _____ **PAR #:** _____ **Fault Category:** _____ **NCR:** Yes No **DQA:** _____ **Date:** _____

Resolution: _____ **Disposition:** _____ **QA: N/C Closed:** _____ **Date:** _____

NCR:		WORK ORDER NON-CONFORMANCE (NCR)						
DATE	STEP	Description of NC Section A	Corrective Action Section B			Verification Section C	Approval Chief Eng	Approval QC Inspector
			Initial Chief Eng	Action Description Chief Eng	Sign & Date			

NOTE: Date & initial all entries

H:\fPORMS\Quality Assurance\approved QA\NCRWO RevE